BELIEVE | LIVE | INSPIRE

INDEX

Designed & handmade individually to you **4-5**

Daily Range **6-7**

TIGA 8
TIGA fx 9
TIGA Junior 10
TIGA TX 11
Octane 12
HiLite 13
Chrome 14
TIGA fx-e 15
360° Travel Solution 16-17

Add-ons **18**

FrontWheel 19
Attitude + TIGA 20
Jay Seating 21

Power Solutions **22**

SmartDrive MX2 23
Twion 24
Benoit 25

Sport range **26-27**

Elite 28
Elite CX 29
Grandslam 30
Grandslam CX 31
Interceptor 32
Club Sport 33
Other Sports 34-35

DESIGNED & HANDMADE
INDIVIDUALLY TO
You

Designed using 3D CAD imagery

Handmade in the UK by our experienced technicians

Personalised through embroidery

Tested rigorously and inspected before delivery

RGKi – As individual as you are

Our philosophy is to create for the individual, the outcome being superior performance and comfort. Select a model from our chair range and we build it to your measurements. We call this process RGKi.

Introduction

We get to understand you, talk through your needs and lifestyle and take your precise measurements to initiate our design process.

Design

Your personal measurements are introduced to our CAD system giving accurate 3D imagery, paving the way for a flawless creation process.

Creation

Your chair is brought to life, handmade by our experienced team of technicians.

Embroider

Completely personalise your chair with a design of your choosing for the back canvas e.g. a logo or a design you love. Stitched by our team of machinists in your choice of colours.

Build

With the component parts completed, assembly, rigorous testing and inspection are carried out.

Delivery

Your local mobility advisor will contact you personally to arrange your chair delivery and ensure your satisfaction.

DAILY RANGE

Modern life is full and busy. Working hard and playing hard takes most of your energy. A chair that is light, responsive and manoeuvres easily is a prerequisite style that is a perfect reflection of your strength of character. Upholstery to keep you cool. Quality and tailored craftsmanship inspired by innovation and cutting edge design. Frame finishes, personalised canvas embroidery and colour accents chosen by you.

A PERFECT FIT

From coffee with friends to public transport.
Office buildings to live events.
Airline travel to open road.
Your life, your way.

Life in the fast lane just got faster.

MADE TO MEASURE

Our energy, commitment and passion is dedicated to creating a product that will be an integral part of your core being to give you the freedom to explore, go further and maximise your potential.

Respecting your individuality is our philosophy which is why we work closely with you to design and develop a chair made specifically to your individual measurements and built to perfection which reflects your personality, lifestyle and ambitions.

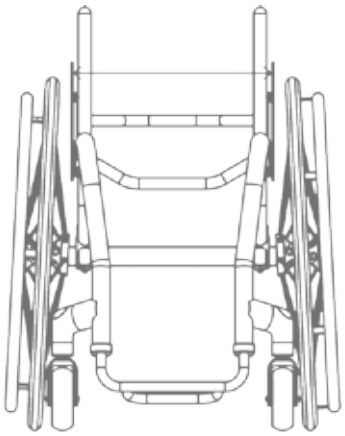

Your individual seat, taper seat and footrest widths are determined in mm increments to ensure excellent posture and positioning

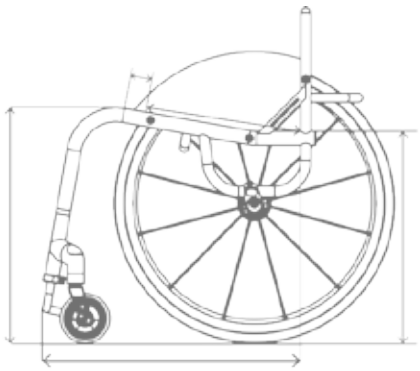

Your individual seat and frame length, combined with an infinite range of seat heights are determined for optimum propulsion efficiency and stability

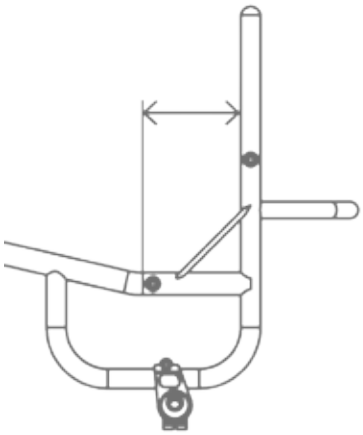

The RGK Ergonomic Seat option helps to improve trunk positioning and pressure distribution which is also made to your individual measurements

TALK TO OUR ADVISORS

Please get in touch with us if you would like to:

- know more about product specifications, options and prices
- understand more about our made to measure process
- arrange a home visit/assessment
- arrange to visit our showroom
- arrange a telephone consultation
- understand more about finance options

…or have any other questions.

Tel: +44 (0) 1543 670077
Email: info@rgklife.com
www.rgklife.com

TIGA

A made to measure, rigid wheelchair for all aspects of your busy life

Combining quality and tailored craftsmanship with innovation and design, TIGA is a fusion of our made to measure process with technology, flair and style. The aluminium frame and Airtech upholstery work in harmony making TIGA ultra-light and super-responsive. Multiple frame finishes and a choice of colour anodising on key parts of your frame accentuate your choice.

Choice of anodised accent colours available (red, blue, black, silver, purple)

Fender sideguard (pictured) or flat sideguard options

Closed frame option

Single post fixed centre of gravity

Technical specifications

- RGKi made to measure
- 7020 aluminium frame
- Hollow forged castor arm with zero tolerance bearing alignment
- 30mm diameter frame tube size
- Product weight from 7.7kg (40cmx40cm seat c/w standard wheels)
- Choice of open or closed frame design
- Available in bariatric sizes up to 550mm seat width
- Camber angles available - 0, 1, 2, 3, 5 °

Key features

- Height adjustable tubular footrest
- Soft roll black castor wheels with low ride castor forks
- Adjustable centre of gravity (fixed upgrade option available)
- Underseat scissor brakes
- Airtech strap adjustable backrest upholstery
- Choice of frame, componentry and accent colour options

COMPATIBLE WITH:

- FrontWheel
- Attitude
- SmartDrive
- Benoit
- Twion
- JAY Seating

Speak to our advisors for the full range of options available.

TIGA fx

We designed a wheelchair so portable it fits into aircraft overhead storage lockers...and the boot of your car

Every so often an idea comes along that changes lives. In this instance it is a creation that revolutionises travel for self-propelling wheelchair users. TIGA fx folds into a briefcase style shape, ideal for storage in tight spaces. The Q-lock system provides rigidity, strength and a lightweight solution along with an action that is simple, easy to operate and streamlined enough to meet all your travel needs. A rigid chair that folds – for people on the move.

Q-lock folding system for backrest and front of frame

Fold flat sideguard system

Integrated footrest with carbon fibre cover

Adjustable centre of gravity with large range of movement

Technical specifications

- RGKi made to measure
- 7020 aluminium frame
- Hollow forged castor arm design with zero tolerance bearing alignment
- 30mm diameter frame tube size
- Product weight from 8.6kg (40cmx40cm seat c/w standard wheels)
- Open rigid frame design, with unique folding system
- Camber angles available - 0, 1, 2, 3, 5 °
- Q-lock folding system for backrest and front frame
- Maximum user weight 125kg

Key features

- Choice of fixed footrest with carbon fibre plate or clamp on height and angle adjustable footrest with aluminium plate
- 4" Soft roll black castor wheels with low ride castor forks
- Fold flat sideguard system
- Underseat scissor brakes
- Adjustable centre of gravity (fixed upgrade option available)
- Airtech strap adjustable backrest upholstery
- Choice of frame, componentry and accent colour options

COMPATIBLE WITH:

- FrontWheel
- Attitude
- SmartDrive
- Benoit
- Twion
- JAY Seating

TIGA jnr

Investing in your child's great future

Enthusiasm and staying active starts at a young age. TIGA Junior is specifically designed to your child's individual measurements and provides the opportunity for a great start to life. It can be personalised through a choice of hip colours and embroidery. The intelligent growth system provides maximum flexibility and adjustability to grow with your child.

Swing away anti-tip for ease of use

Forward mounted castor position improves stability and maximises self-propelling opportunity

Abduction seat and adjustable footrest for improved leg positioning and easy access for transfer stability

Height adjustable stroller push handles

Technical specifications

- RGKi made to measure
- 7020 aluminium frame with forward mounted castor position for improved stability and self-propelling opportunity
- 30mm diameter frame tube size
- Product weight from 9kg (40cmx40cm seat c/w standard wheels)
- Camber angles available - 0, 1, 2, 3, 5 °
- Crash tested option available
- Maximum user weight 75kg

Key features

- Abduction seat and multi adjustable footrest for improved leg positioning and easy access for transfer stability
- Height adjustable, removable stroller push handles
- Swing away anti-tip
- Adjustable centre of gravity
- Airtech strap adjustable backrest upholstery
- Push to lock kids brakes
- Choice of frame and componentry colour options

COMPATIBLE WITH:

- FrontWheel
- Attitude
- SmartDrive
- Twion
- JAY Seating

Speak to our advisors for the full range of options available.

TIGA TX

Tough enough to tackle all terrains

Looking to get out into the great outdoors? The Tiga TX lightweight aluminium frame, forward mounted castor position and oversize front castor wheels provide you the opportunity to go where other chairs cannot. Explore where you choose with maximum stability and minimum effort.

Underseat scissor brakes

Screw on sideguards (carbon fibre)

Forward mounted castor position for increased all terrain capacity

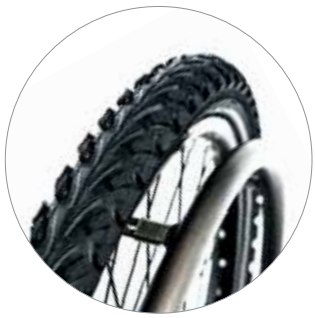

Equalizer wheels with mountain bike tyres

Technical specifications

- RGKi made to measure
- 7020 aluminium frame
- 30mm diameter frame tube size
- Product weight from 9kg (40cmx40cm seat c/w standard wheels)
- Open frame design allows easy transport
- Camber angles available - 0, 1, 2, 3, 5 °

Key features

- Height adjustable tubular footrest
- Equalizer wheels with mountain bike tyres
- Forward mounted castor position for increased all terrain capacity
- Oversize 200x50 pneumatic castor wheels
- Adjustable centre of gravity (fixed upgrade option available)
- Underseat scissor brakes
- Airtech strap adjustable backrest upholstery
- Choice of frame and componentry colour options

COMPATIBLE WITH:

- JAY Seating

Octane

Ultra lightweight, minimal adjustments

Octane is hand crafted using grade 9 titanium with a 32mm oversized style tube which combines a distinct look with ultra lightweight. The open frame style with integrated camber bar and fixed backrest gives you a superb riding chair suitable for experienced users. A distinct style ensures you make your statement.

Low ride castor forks with welded castor housing ensures perfect alignment

Height adjustable tubular titanium footrest (with carbon fibre cover upgrade option)

Airtech strap adjustable backrest upholstery

Fixed centre of gravity

Technical specifications

- RGKi made to measure
- Titanium premium grade 9 frame with 0% corrosion
- 32mm diameter frame tube size
- Product weight from 7.5kg (40cmx40cm seat c/w standard wheels)
- Open frame design
- Camber angles available - 0, 1, 2, 3, 5 °

Key features

- Height adjustable tubular titanium footrest
- Soft roll black castor wheels with low ride castor forks
- Fixed centre of gravity and fixed backrest
- Underseat scissor brakes
- Airtech strap adjustable backrest upholstery
- Choice of frame and componentry colour options

COMPATIBLE WITH:

- FrontWheel
- SmartDrive
- JAY Seating

Speak to our advisors for the full range of options available.

Hi·Lite

Manoeuvre easily throughout your daily life

With a simple titanium frame design and using your precise individual measurements, Hi Lite gives you confidence to manoeuvre easily throughout your daily life. It provides easy, lightweight and independent transportability combined with an extensive range of options and accessories.

Optional Frog Leg aluminium centre castor wheels with low ride castor forks (standard)

Optional flip down push handles

Fixed centre of gravity upgrade option

Airtech strap adjustable backrest upholstery

DAILY RANGE

Technical specifications

- RGKi made to measure
- Titanium grade 2 frame with 0% corrosion
- 25mm diameter frame tube size
- Product weight from 8.1kg (40cmx40cm seat c/w standard wheels)
- Choice of open or closed frame design
- Camber angles available - 0, 1, 2, 3, 5 ° (Individual angle when fixed centre of gravity)
- Maximum user weight 125kg

Key features

- Height adjustable tubular titanium footrest
- Soft roll black castor wheels with low ride castor forks
- Adjustable centre of gravity (fixed upgrade option available)
- Choice of brake style, scissor or push to lock
- Airtech strap adjustable backrest upholstery
- Choice of frame and componentry colour options

COMPATIBLE WITH:

- FrontWheel
- Attitude
- SmartDrive
- Benoit
- Twion
- JAY Seating

CHROME

Economical, made-to-measure wheelchair

Try out Chrome and be inspired by how the classic frame design, made to your own individual specifications, will transform your daily life. With a choice of wheel and castor sizes, this economical chair is an ideal introduction to the range.

Height adjustable tubular footrest and velcro strap (pictured with carbon fibre cover upgrade option)

Optional heavy duty castor fork available

Optional folding backrest feature available

Adjustable centre of gravity

Technical specifications

- RGKi made to measure
- Chrome moly steel frame
- 25mm diameter frame tube size
- Product weight from 9.1kg (40cmx40cm seat c/w standard wheels)
- Individual camber angles available
- Bariatric sizes up to 550mm seat width
- Choice of open or closed frame design

Key features

- Height adjustable tubular footrest
- 4 or 5" soft roll black castor wheels with extruded aluminium castor forks
- Adjustable centre of gravity
- Choice of brake style, scissor or push to lock
- Adjustable tension nylon backrest and seat upholstery
- Choice of frame and componentry colour options

COMPATIBLE WITH:

- FrontWheel
- Attitude
- SmartDrive
- Benoit
- Twion
- JAY Seating

Speak to our advisors for the full range of options available.

TIGA fx-e

A Tiga fx – but in configurable sizes as a cost friendly alternative

We believe that every wheelchair user should have the potential to live their life to the full which is why we have developed TIGA fx-e. By sharing the same unique folding design, with added adjustability as standard, gives you a cost friendly alternative available in a range of configurable size, colour and option choices.

Q-Lock folding system for backrest and front of frame

Low ride castor forks

Height and angle adjustable footrest with aluminium plate

Adjustable centre of gravity

Technical specifications

- Available in a range of configurable sizes
- 7020 aluminium frame
- Hollow forged castor arm design with zero tolerance bearing alignment
- 30mm diameter frame tube size
- Product weight from 9kg (40cmx40cm seat c/w standard wheels)
- Ergonomic seat length 120mm
- Camber angle - 2°
- Q-Lock folding system for backrest and front of frame

Key features

- Height and angle adjustable footrest with aluminium plate and Velcro calf strap
- 100mm soft roll front castor wheels with low ride castor forks
- Sun Fusion 16 spoke wheels with hard anodised aluminium handrims
- Fold flat aluminium sideguards
- Underseat scissor brakes
- Adjustable centre of gravity
- Airtech strap adjustable backrest upholstery
- Choice of frame, componentry and accent colour options

COMPATIBLE WITH:

- FrontWheel
- Attitude
- SmartDrive
- Benoit
- Twion
- JAY Seating

360°

YOUR TRAVEL SOLUTION

Compact, lightweight, seamlessly working together

Numerous horror stories have been told of chairs being lost, damaged or refused at the airport, that it seems to have become a too common occurrence. It's saddening to hear of such incidences leaving passengers in very anxious and inconvenient situations, and in some extreme cases, putting them off flying for life.

We believe these issues have been going on for far too long which is why we developed a solution to change the mindsets and lives of wheelchair users when they travel.

The 360° Solution is a range of products which break the physical barriers to active life. They are all interchangeable and fit together in different combinations to cater for all kinds of circumstances and abilities. They are all compact, lightweight and seamlessly working together. The 360° Solution is made up of the TIGA fx, FrontWheel, SmartDrive and Jay Seating to help inspire and support your active lifestyle goals.

THE FREEDOM OF MOVING

Whether you enjoy taking a drive, going on road trips or on holiday by car, the TIGA fx, FrontWheel, JAY seating and SmartDrive will make your journey hassle-free. They can all fit into the boot of a car because of their compact design and they are all lightweight for easy handling.

Where will your next journey be?

TIGA FX

TIGA fx folds into a briefcase style shape, ideal for storage in tight spaces such as a small car and air craft storage.

FRONTWHEEL

It enables you to travel across grass, cobbles, mud, gravel and other uneven ground easily.

SmartDrive

The SmartDrive MX2 is a revolutionary addition to your wheelchair that assists with your active lifestyle.

JAY

JAY wheelchair backs provide posterior lateral pelvic stabilisation along with enhanced trunk stability, they also reduce fatigue and maximise function to provide you with comfort and stability to go anywhere with confidence.

TALK TO OUR ADVISORS

If you would like to:

- know more about the 360° Solution
- understand more about our made to measure process
- arrange to visit our showroom
- arrange a telephone consultation
- understand more about finance options

or any other questions..

Please get in touch with us
Tel: +44 (0) 1543 670077
Email: info@rgklife.com
www.rgklife.com

ADD-ONS

The great outdoors is full of adventure…

Travelling easily over grass, mud or uneven ground can give you a great sense of freedom and the opportunity to do more. Or you may like the idea of getting around quicker and ramping up your exercise regime. In addition to your RGK wheelchair, we provide a selection of products which you may find an ideal add-on for your chair, perfect for your outdoor lifestyle.

Camping
Woodland trails
Festivals
Getting about town
Exercising

We also provide seating solutions for posterior lateral pelvic stabilisation and enhanced trunk stability to reduce fatigue, maximise function and provide you with comfort and stability to go anywhere with confidence.

FRONTWHEEL

Pushing the boundaries, see where it will take you

Developing solutions to improve your way of living is what we thrive on everyday which is why we have designed FrontWheel. Fitted and removed in seconds, it enables you to travel across grass, cobbles, mud, gravel and other uneven ground easily by keeping your front castor wheels off the floor at all times when you move in any direction, including backwards.

200x50 pneumatic tyre with anti-flutter fork

Quick release handles to activate and release

Robust three point connection to frame

Retro fit to chair frame via mounting clamps

Technical specifications

- Product weight – 2.6kg
- Maximum user weight – 125kg
- 200x50 pneumatic tyre with anti-flutter fork

Key features

- Compact and easy to fit and remove in seconds
- Castor wheels remain clear of the ground at all times, even when wheeling backwards
- Robust three point connection to main frame and underneath footrest
- Retro fit to chair frame via mounting clamps
- Footrest width is unaffected
- No need to move feet during installation
- Locks up and down for when both in use and not in use

COMPATIBLE WITH:

- TIGA
- TIGA fx
- TIGA fx-e
- TIGA Jnr
- Octane
- HiLite
- Chrome

ATTITUDE +TIGA

Some things are meant to be together

When the Attitude bike and TIGA unite, they create this incredible energy and give a sense of freedom like no other. Choose from manual, power or hybrid, the relationship is seamless and they work together to give you an ultimate ride. Designed to fit you perfectly so you can just get out there and go.

Easy to attach locking system

The TIGA is made to measure around you

Customised TIGA frame to ensure optimum position for cycling

Powerful 250 watt motor with 23 kph top speed

Manual

The Attitude Manual wheelchair hand bike is ideal for those looking to improve their strength and overall stamina through recreational cycling. 20" Front wheels and the 30 speed gearing provide an exceptional driving performance which is perfect for all terrains. And the powerful disk brake allows a smooth speed control.

Power

The Attitude Power hand bike provides you with 100 % powered propulsion from your comfort of your wheelchair. Relieving the strain on your upper-body, there's no need to worry about hill inclines or travelling distance – so you're free to relax and enjoy the ride.

Hybrid

The Attitude Hybrid wheelchair hand bike combines all of the health benefits of manual cycling with the reliability of powered propulsion. Helping to reduce fatigue, the powered motor can be engaged whenever you encounter a tricky hill-climb or just to provide you with that little extra speed when you need it.

Speak to our advisors for the full range of options available.

JAY®
Superior Clinical Seating.

Superior seating and positioning

Designed to stabilise the pelvis, protect the skin and position the body, the comprehensive range of JAY cushions ensures the right choice for your seating requirements. While the JAY back range provides posterior lateral pelvic stabilisation to reduce fatigue and maximise function.

Wheelchair Cushions

Wheelchair Backs

Wheelchair Headrests

Jay backrests are designed to provide posterior lateral pelvic stabilization along with enhanced trunk stability. They are lightweight and adjustable, allowing for easy installation. Jay backs reduce fatigue and maximise function to provide clients the comfort and stability to go anywhere with confidence and regain their independence.

ADD-ONS

COMPATIBLE WITH:

- TIGA
- TIGA fx
- TIGA fx-e
- TIGA Jnr
- TIGA TX
- Octane
- HiLite
- Chrome

POWER SOLUTIONS

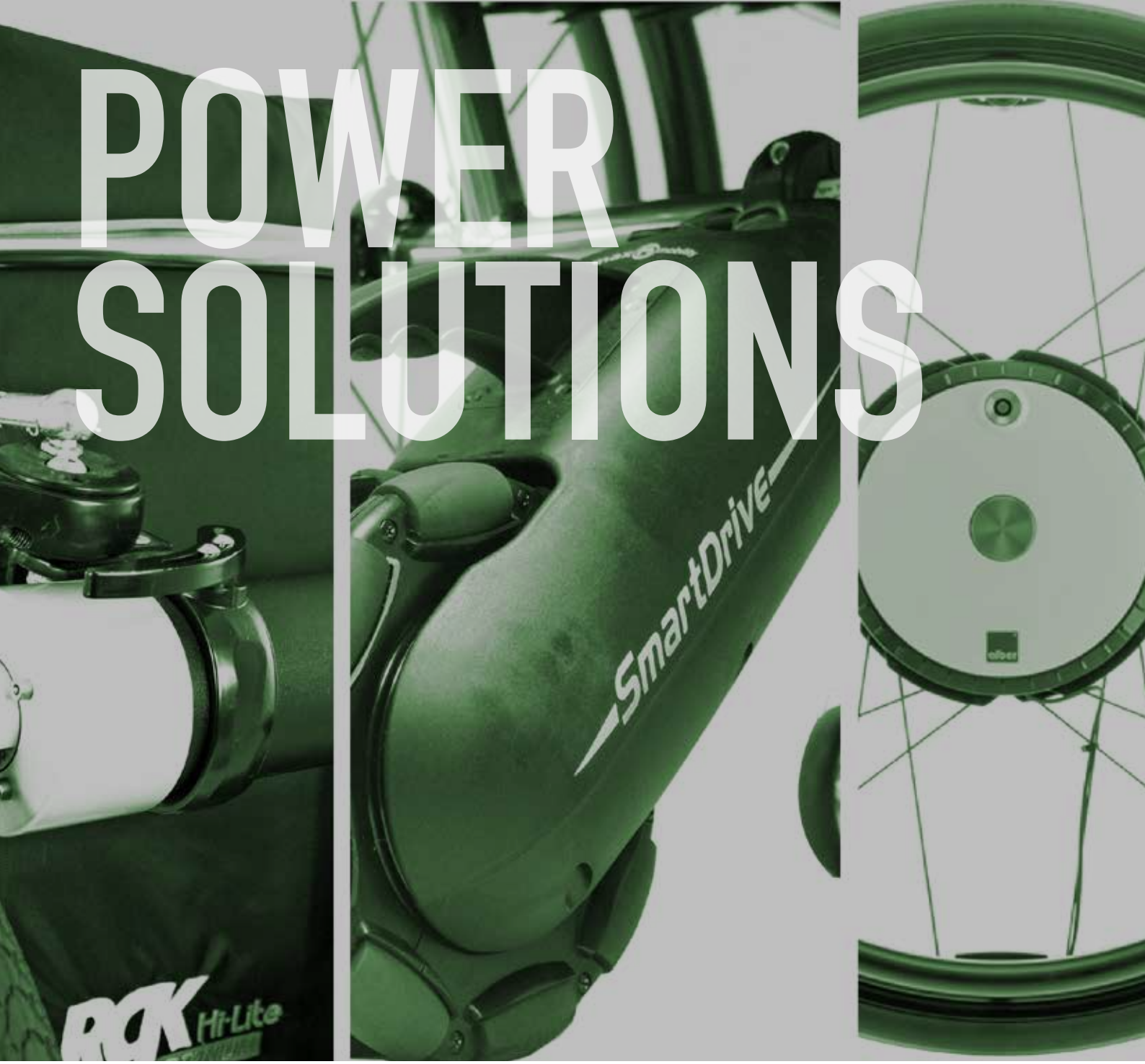

Maximising your potential and independence is one of the main reasons we're here. Alongside our made to measure wheelchairs, we also provide a range of power solutions to cater for a variety of lifestyles. From fully powered wheelchairs with Benoit to power assist devices like the SmartDrive MX2, we can ensure we create the perfect, long-term solution for you.

Days out with family and friends
Getting about town
Trips to the city
Rides in the park
Business travel

SmartDrive

Assists with your active lifestyle, protects against RSI

SmartDrive MX2 reduces the number of repetitive pushes you do each day by taking over once you get going. It's like a cruise control which you set by the speed of your push. It has an anti-rollback feature that allows you to stop on a slope and then easily get going again. It will go for miles on a single charge. Turn on and get out there!

Compatible with RGK range

Intelligent wrist control

Convenient single-unit design

Compact size and easily transportable

POWER SOLUTIONS

Technical specifications

- Speed: 0.5 – 5.5 mph
- Range: 12 miles
- Battery: LiFePO4 – 36 V & 3.4 Ah
- Motor: 250 W Brushless DC
- Push Activated Cruise Control
- Bluetooth LE Drive Control
- Only 12.5 lbs
- Rigid and folding chair compatibility

COMPATIBLE WITH:

- TIGA
- TIGA fx
- TIGA fx-e
- TIGA Jnr
- Octane
- HiLite
- Chrome

Powerful – Cruises up hills and over thick carpet
Intuitive – Push to go. Tap brake to stop. It's that simple
Simple – Turn on and go all day without charging
Flexible – Moves with you for wheelies and curbs
Lightweight – So light, you won't even know it's there

twion

Energise your wheelchair

With Twion wheels, all the engineering is compactly and discreetly integrated in the wheel hub. The electric motors, equipped with state-of-the-art digital electronics, provide you with extra power at each propelling movement. The sensor fitted to the push rim determines exactly the right amount of support. You remain on the move to reach your destination more quickly, efficiently and with less effort. The silent direct drive ensures great agility and easy handling.

Optional anti-tips with swivelling and jack-up function

Easy on/off installation

EasyConnex charging plug automatically finds the correct plug-in position

Technical specifications

- 24 x 1" wheels with Schwalbe Marathon Plus Evolution tyres (with unrivalled puncture protection) as standard
- Quick-release axle, length: 123 mm, diameter: ½"
- Max. weight of occupant: 120 kg
- Motor, electronics and battery pack integrated in the wheel hub
- White cover
- Black outer ring
- Stainless steel button on q/r axle
- Aluminium push-rim, powder-coated black/matt
- Weight of standard model: 6.3 kg per wheel

COMPATIBLE WITH:

- TIGA
- TIGA fx
- TIGA fx-e
- TIGA Jnr
- HiLite
- Chrome

Speak to our advisors for the full range of options available.

BENOIT SYSTEMES

The advantages of a manual wheelchair, the power of an electric wheelchair

The Light Drive is controlled with a joystick and yet remains as manoeuvrable and as easy to use as a manual chair. It gives you the freedom to climb hills with no effort and can be installed in less than 30 seconds.

Joystick control, left or right side

Quick release anti-tip

Mid mount battery ensures correct chair balance

Quick release system with positive drive direct to tyre

POWER SOLUTIONS

Technical specifications

- Suitable wheelchairs: almost all from 25cm seat width
- Speed: adjustable between 0-10km/h (0-6mph)
- Climb: 20% (12°) for someone of 70kg (11 stone)
- Controller: joystick

Motor - Standard Version

- Weight: 8.4kg (18.5 lb) /
- Power: 2x24vx100w

Batteries

- Lead battery 10Ah
  Weight: 8.5kg (18.7 lb) / Charging time: 10h Autonomy: 7 to 9km (5m)
- NiMH 8,5Ah
  Weight: 3kg (6.6 lb) / Charging time: 4h Autonomy: 6 to 8km (4.35m)
- NiMH 13,5Ah
  Weight: 6kg (13.2 lb) / Charging time: 7h Autonomy: 10 to 15km (7.7m)

COMPATIBLE WITH:

- TIGA
- TIGA fx
- TIGA fx-e
- HiLite
- Chrome

SPORT RANGE

We are passionate about sporting life. From grassroots to the Paralympics, our aim is to inspire participation by building sport wheelchairs that are suitable for each individual and every team to win at their discipline, regardless of age or aspiration.
We are proud of our history and strong links to universities and sporting federations alike, helping them to achieve the best results for their teams' performances with our chairs.

Teams
Unity is strength, where there is teamwork and collaboration wonderful things are achieved. Combining consultation, innovation, and tailored craftsmanship.

Individuals
Time to focus on the task at hand, nothing else matters. Confident that your chair has been engineered to maximise your potential, you are free to concentrate on your performance. Two elements working towards the same goal.

MADE TO MEASURE

We understand that everyone has their own unique style of game play which we ensure is infused into the design of your sports chair. Each one we create has a specific design to you, made to your individual measurements and preferences to maximise your comfort, responsiveness and performance.

We work closely with you to develop your chair to ensure it's perfect for you and your game.

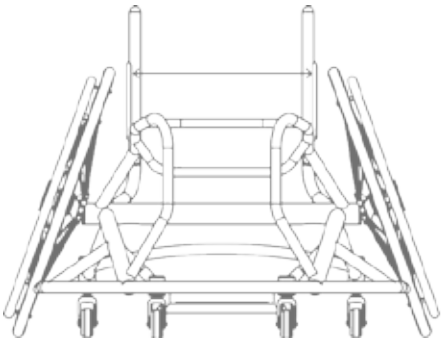

Your individual seat, taper seat and footrest widths are determined in mm increments to ensure excellent posture and positioning

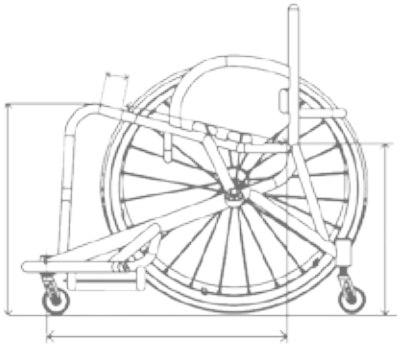

Your individual seat and frame length, combined with an infinite range of seat heights are determined for optimum propulsion efficiency and stability

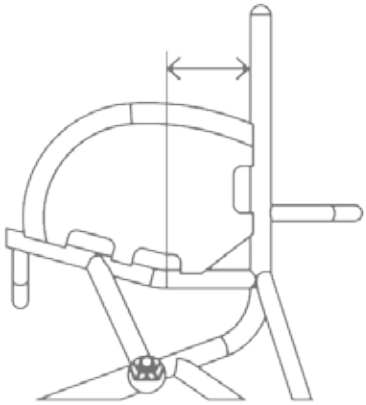

The RGK Ergonomic Seat option helps to improve trunk positioning and pressure distribution which is also made to your individual measurements

Individual sitting positions are available to suit all classifications and playing styles

TALK TO OUR ADVISORS

Please get in touch with us if you would like to:

- know more about product specifications, options and prices
- understand more about our made to measure process
- arrange a visit / assessment at your sport club / with your coach
- arrange to visit our showroom
- arrange a telephone consultation
- understand more about finance options

…or have any other questions.

Tel: +44 (0) 1543 670077
Email: info@rgklife.com
www.rgklife.com

elite

Lead the way with the Paralympian's chair of choice

Countdown clock is on and your team is down by one, time is ticking. Coach gives you the play. You nailed it in practice all week, time to put it into action. Train hard, win easy. The 7020 aluminium frame with 45mm straight camber tube provides the most rigid and responsive drive to maximise your performance. Individual measurements and specifications ensure a perfect match to your playing style. Pressure shot. No issue.

Integrated height adjustable anti-tip (single or double)

Integrated camber bar

Integrated aluminium fork. Light and resistant

Integrated footrest with foot strap

Technical specifications

- RGKi made to measure
- 7020 aluminium frame
- 45mm diameter straight camber bar
- Product weight from 9.2kg (40cmx40cm seat c/w standard wheels)

Key features

- Fixed aluminium footrest with foot strap (adjustable upgrade option available)
- 61mm sport castor wheel with micro sport castor forks
- Choice of offensive wing designs
- Individual sitting positions to suit all classifications and playing styles
- Zero tolerance castor housing bearing alignment
- Choice of fixed or adjustable centre of gravity
- Choice of fixed or removable anti tip, single or double
- Adjustable backrest upholstery with tension straps
- Wide range of strapping options
- Compatible with prosthetic fixings
- Choice of frame and componentry colour options, including polished and brushed

Speak to our advisors for the full range of options available.

elite•CX

Welcome to the future of carbon fibre wheelchair seating

Providing you with the tools to help you improve performance is something we are extremely passionate about and always strive to achieve, which is why we've developed the elite CX carbon fibre, basketball wheelchair, seating system.

Molded carbon fibre seating system wraps around you for even energy distribution

Strong and versatile clamp mount

Airtech and neoprene cover with cushion foam inserts

Integrated Pelvi-Loc strapping for optimum connection

When a player sits in a standard sports seat, there are prominent gaps between the four corners of the seat and the player's body which is where energy can be lost (see image 1). This loss of energy can impact the responsiveness of a chair.
The CX is shaped around the contours of the body to help reduce the amount of energy lost, compared to standard sports seats. This is achieved by eliminating, as much as possible, the gaps that are usually seen between the four corners of a square seat and the player's body (see image 2).

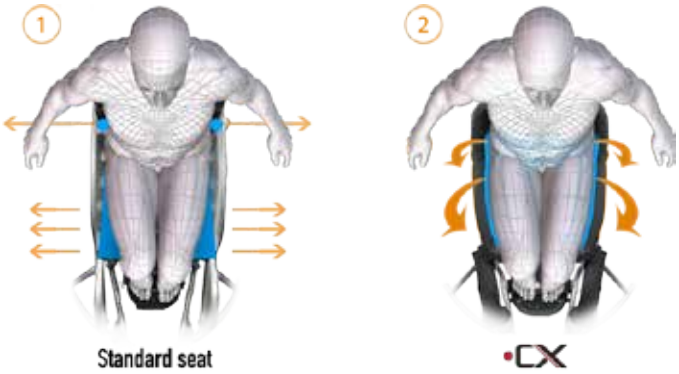

The carbon fibre seat is shaped to fit your individual measurements and preferences including seat length, backrest height and side height.

The backrest is on a pivot which can be adjusted forwards or backwards (+/- 5-10 degrees as standard) to suit your needs.

You can also choose from a range of seat widths which come in increments of 25mm.

The upholstery provides a modular foam layout which is also shaped around your body and can be easily adjusted if required. It also has a one-piece cover with a waterproof base and Airtech sides to let skin breathe.

The seat base can be adjusted +/- 10mm in all directions and can either be lowered or raised using spacers which are fitted onto the chair frame underneath the seat.

Regardless of body shape and size, we understand that your game play is individual to you so we make sure that your seat accommodates all your specific requirements that you may have.

grandslam

Match point for the championship

Time to focus on the task at hand, nothing else matters. Giving you the speed of turn, outstanding acceleration and optimal support and positioning the Grandslam lightweight frame and knee support system mean you can react fast to any solid return and guarantees to deliver the performance your training has paved the way for. Everything is engineered for you. Everything else is instinct. The point is yours. Game, set and match.

Integrated camber bar gives great rigidity

Multi adjustable knee support system

Integrated anti-tip for maximum strength

Welded sideguards ensure great lateral support

Technical specifications

- RGKi made to measure
- 7020 aluminium frame
- 45mm diameter straight camber bar
- Product weight from 9kg (40cmx40cm seat c/w standard wheels)
- Camber angles available - 16, 18, 20, 22º

Key features

- Fixed aluminium footrest (adjustable upgrade option available)
- 61mm sport castor wheel with micro sport castor forks
- Individual sitting positions to suit all classifications and playing styles
- Zero tolerance castor housing bearing alignment
- Choice of fixed or adjustable centre of gravity
- Choice of fixed or removable anti tip, single or double
- Multi adjustable knee support system
- Wide range of strapping options
- Adjustable backrest upholstery with tension straps
- Compatible with prosthetic fixings
- Choice of frame and componentry colour options, including polished and brushed

Speak to our advisors for the full range of options available.

grandslam•CX

Welcome to the future of carbon fibre wheelchair seating

Unlike standard seats that usually adopt a box shape with straight sideguards attached to a square seat plate, the CX has a curved design shaped around the contours of your body to ensure maximum connection, even energy distribution and comfort.

Molded carbon fibre seating system wraps around you for even energy distribution

Strong and versatile clamp mount

Airtech and neoprene cover with cushion foam inserts

Integrated Pelvi-Loc strapping for optimum connection

When a player sits in a standard sports seat, there are prominent gaps between the four corners of the seat and the player's body which is where energy can be lost (see image 1). This loss of energy can impact the responsiveness of a chair.
The CX is shaped around the contours of the body to help reduce the amount of energy lost, compared to standard sports seats. This is achieved by eliminating, as much as possible, the gaps that are usually seen between the four corners of a square seat and the player's body (see image 2).

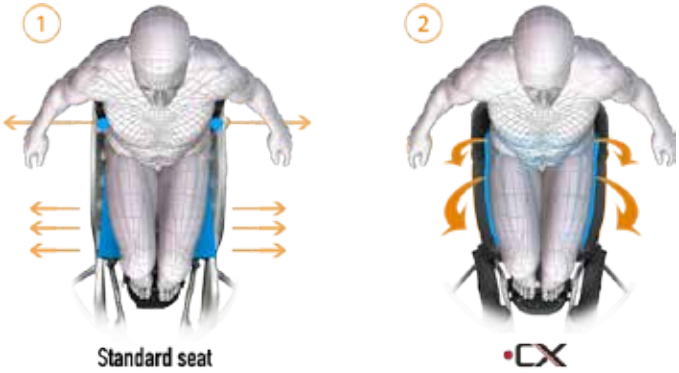

The carbon fibre seat is shaped to fit your individual measurements and preferences including seat length, backrest height and side height.

The backrest is on a pivot which can be adjusted forwards or backwards (+/- 5-10 degrees as standard) to suit your needs.

You can also choose from a range of seat widths which come in increments of 25mm.

The upholstery provides a modular foam layout which is also shaped around your body and can be easily adjusted if required. It also has a one-piece cover with a waterproof base and Airtech sides to let skin breathe.

The seat base can be adjusted +/- 10mm in all directions and can either be lowered or raised using spacers which are fitted onto the chair frame underneath the seat.

Regardless of body shape and size, we understand that your game play is individual to you so we make sure that your seat accommodates all your specific requirements that you may have.

Technical specifications

- Moulded carbon fibre seating system
- Separate seat and backrest moulds
- Four core mould widths – 330, 355, 380, 405mm
- Individual front taper design
- Individual backrest
- Suitable for all classifications

Key features

- Two piece construction for optimal fit and performance
- Improved fit and connection maximise response and performance
- Airtech and neoprene cover with cushion foam inserts for effective support and heat dissipation
- Integrated Pelvi-Loc strapping
- Athlete and equipment in perfect harmony

INTERCEPTOR

Develop your game with the chair to fit

Looking to develop your game to the next level?
Individual choices, choose fixed or adjustable options to give you the confidence that your chair has been engineered to maximise your potential. Interceptor, a chair to develop your performance, two elements working toward the same goal.

Integrated camber bar and anti-tip

Extruded aluminium castor forks

Height and angle adjustable footrest

Integrated offensive wing

Technical specifications

- RGKi made to measure
- Chrome moly steel frame
- 19mm seat tube with 25mm camber bar
- Integrated or adjustable camber bar with individual angles
- Product weight from 10.5kg (40cmx40cm seat c/w standard wheels)

Key features

- Multi sport compatible
- Height and angle adjustable footrest with aluminium plate (fixed upgrade option available)
- 61mm sport castor wheel with extruded aluminium castor forks
- Choice of offensive wing designs
- Adjustable centre of gravity (fixed upgrade option available)
- Choice of fixed or removable anti tip
- Adjustable backrest and seat upholstery with tension straps
- Choice of frame and componentry colour options

Speak to our advisors for the full range of options available.

CLUB SPORTe

An entry level sports wheelchair that's configurable and economical

Feeling inspired to take up a wheelchair sport but don't want to make a major commitment just yet? Club Sport is the chair for you! An entry level sports chair that is economical and ready to go when you are. Customisable with your own embroidery or logo and compatible with any court sport. Its range of sizes and adjustments also make it ideal for sport clubs and schools.

Aluminium screw in sideguards

Integrated offensive wing

Height, angle and lenght adjustable footrest

Quick release single anti-tip with support system

Technical specifications

- Available in a range of configurable sizes
- Seat width options, 4 seat height/wheel size options
- Chrome moly steel frame
- Product weight from 12kg (40cmx40cm seat c/w standard wheels)
- Adjustable centre of gravity
- Camber bar (angle - 18º)
- Integrated offensive wing
- Aluminium screw in sideguards
- Quick release single anti-tip

Key features

- Height, angle and length adjustable footrest
- 72mm sport castor wheels with extruded castor forks
- 5cm medium density foam cushion (hard plastazote on tall seat option 4)
- Cross laced wire spoke wheels complete with aluminium hard anodised hand rim & Kenda tyre
- Adjustable seat and backrest upholstery (black)
- Adjustable height backrest 250-300mm (25mm increments)
- Calf strap and foot strap
- Choice of frame colour options

Designed & handmade for

Your

SPORTING NEEDS

We can create completely bespoke wheelchairs for your specific requirements

At RGK, we strive to give you the freedom to explore, go further and maximise your potential. Our aim is always to create a product that will be an integral part of your core being and respecting your individuality is our philosophy.

Every sport requires a unique wheelchair design made to the finest specification to maximise performance. It needs to be specific to the sport itself as well as to the individual, which is why we can work closely with you to develop a completely bespoke sports wheelchair, perfect for you and your game so you are free to concentrate on your performance. Two elements working towards the same goal.

If you don't see what you're looking for in this brochure, please contact us and one of our mobility advisors will be more than happy to discuss through your requirements.

Selection of sports that we've designed bespoke wheelchairs for:

Archery
Badminton
Boccia
Table tennis
Curling
Fencing
Rugby
Dance
Hockey
Floor Ball
and more

TALK TO OUR ADVISORS

Please get in touch with us
Tel: +44 (0) 1543 670077
Email: info@rgklife.com
www.rgklife.com

SHARK RS

The hand bike choice of champions

The award-winning QUICKIE Shark RS hand bike - the choice of champions. The Shark RS's new innovative frame is designed to allow for the best individual positioning and performance.

The Shark RS hand bike was voted Best Product of the Year 2013 at the Plus X awards.

PLUS X AWARD
honored as:
BEST PRODUCT OF THE YEAR 2013

PLUS X AWARD
achieved for:
High Quality
Design
Functionality
Ergonomics

"If you want to race this is the hand bike for you"

- Jimmy Goddard, Para-Triathlete

DT SWISS 571 RS Carbon Wheel

Innovative hand bike frame design

Firmly welded front fork

Rear axle

www.rgklife.com

Units 8a/b/c, Ring Road, Zone 2,
Burntwood Business Park,
Burntwood, Staffordshire, WS7 3JQ,
United Kingdom
Email: info@rgklife.com
Tel: 01543 670077

SUNRISE MEDICAL®